Autotrol Performa™ Cv

Conditioner/Filter

Water Control System

Installation, Operation and Maintenance Manual

[illegible]:

Table of Contents

1.0 ma C m 3
1.1 a 3
1.2 I a a 5
1.3 a ma C C /F a 7
1.4 D a C 8

2.0 ma C 962 C 9
2.1 I - ma C C a F m 9
2.2 amm a A a 10
2.3 C amm a 16

3.0 ma C F a a C , 962F, 962F C, 942F 18
3.1 amm a A a 18
3.2 E a a a am a - 962 a a a a C 24

4.0 ma C ma e a a G a- 27
4.1 G a a 27
4.2 I C 28
4.3 ma C C ma Da a 31

5.0 ma C a - 34
5.1 H a Da a 34
5.2 a Vma a 35
5.3 m - a A m 36
5.4 m - C 36
5.5 I a C a 38
5.6 a D a 38
5.7 ma C C F D a am 38
5.8 ma C F F D a am 40
5.9 - 41

6.0 ma C a 44
6.1 a C m E 44
6.2 a L 45
6.3 ma C C 46

1.0 Performa Cv System

1.1 Specifications

1.1.1 Performa Cv Conditioner

Flow Rates (Valve Only)

@ 15 (1.03 a) . . . . 25.0 n (5.7 n^3/)
Ba a (C) @ 25 (1.72 a) . . . . 20.0 n (4.5 n^3/)
. . . . C = 6.5 (K = 5.58)
Ba a C . . . . C = 4.0 (K = 3.46)

Control Configurations

962 Microprocessor Demand System and 962 Electronic Timeclock

Ba a . . . . 4 60 n
B . . . . E a a a
. . . . 7 125 n
Fa . . . . 2 19 n
E a B a - n F

Valve Connections/Dimensions

a a . . . . 2-1/2 - 8, n a
I . . . . 1-3/4 - 12 C-2A,.

1.1.2 Performa Cv Filter Specifications

Flow Rates (Valve Only)

@ 15 (1.03 a) .... 25.0 m (5.7 m^{3}/)

Ba a- (F) @ 25 (1.72 a) .... 25.0 m (4.5 m^{3}/)

.... C = 6.5 (K = 5.58)

Ba a- F .... C = 5.0 (K = 5.78)

Control Operation

942F Mechanical Clock Timer - 7 Day or 12 Day

Ba a- .... 8-30 m

F Fa ....9 m

962F Microprocessor Demand

Ba a- .... 4 60 m

Fa .... 2 19 m

962 FTC Electronic Time Clock

Ba a- .... 4 60 m

Fa .... 2 19 m

Interval Regeneration... Da - a

Valve Connections/Dimensions

a - a .... 2-1/2 - - 8, ma

I ⁄ .... 1-3/4 - - 12 C-2A, ma

D a L .... 3/4- - , ma

B L .... 3/8- - , ma

D .D. .... 1.050 - (27 mm)

D L - .... 1/2 1/2 - (13 mm 13 mm) a a

Operating

a B ....G a - a

C m .... C m a

- (a - C) 4.5 (2.0)

a m .... 12 AC 400 mA (4.6 A)

a m I ....115 50/60 H , 230 50/60 H

100 50/60 H

a ....10 120 (1.37 8.27 a)

Ca a a: 20 100 (1.37 6.89 a)

a m a .... 34° 100°F (1° 38°C)

Options

B a a , V 1265 .... 1-3/4 - - 12 C - 2A ma

B a I ⁄ F K :

C , a A a .... 1-1/4- - , 1- - , 3/4- - , 28-mm , 22-mm

C C, A a ....1- - , 3/4- - , 25-mm

a B A a .... 1- - ma , 3/4- - ma

B a B A a .... 1- - ma , 3/4- - ma

Flow Meter 962 Control .... 1- - A

4.1 a a .

1.2 Installation

A ᵑ a a ᵑ ᵑ a .

I a a – a – aᵑa .

Location Selection

1. – a – a a a – a – a .
2. I – a ᵑ a a aᵑ ᵑ , ᵑa a a a a a a a a a .
3. a ᵑ a a – a ; – a – a a .
4. D a a a a – a – a a a 10 (3 ᵑ) – – a – – – a . a – a a ᵑ ᵑ – a – – a ᵑ– a a – – a .

   H a a aᵑa – . A 10- (3-ᵑ) a , , , ., a a a a – – . A a – a ᵑ– a – , – a a a , a a– a – a ᵑ– . **If a check valve is installed, make certain the water heating unit is equipped with a properly rated temperature and pressure safety relief valve. Also, be certain that local codes are not violated.**
5. D a – (– a a) ᵑ ᵑ a 34 F (1 C) 120 F (49 C).
6. D a a a a ᵑ .
7. – a a ᵑᵑ .

Water Line Connection

– a a a a a ᵑ ᵑᵑ a – – a ᵑ a – a a .

– ᵑ ᵑᵑ a ᵑ a – A 1265 a a (F 1.1) a ᵑ - a (F 1.2). – – – a ᵑ a ; – A 1265 a ᵑ a a a .

Not in Bypass

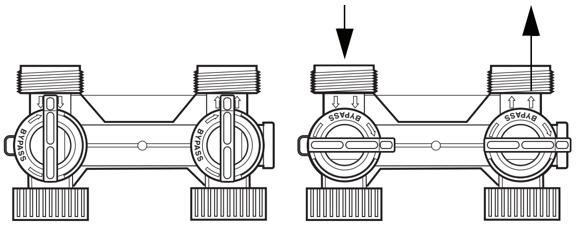

F 1.1 - A 1265 B a a

F 1.2 - a G a B a ᵑ

Drain Line Connection

Note: a a ᵑᵑ a a a – . L a ᵑa – a – .

1. I a a ; – a a ᵑ – a 20 (6.1 ᵑ) ᵑ– a . F – a a , a a a a a , 1/2- – (1.3- ᵑ) a – a – a .
2. I– a a– a 5 ᵑ (22.7 L ᵑ) – a ᵑ – a 20 (6.1 ᵑ) ᵑ a , 3/4- – (1.9- ᵑ) 40 (12.2 ᵑ). A , – a a a – 3/4- – – 3/4- – a .
3. I– a – – a ᵑ a , ᵑa a – 6 (1.8 ᵑ) – 15 (4.6 ᵑ) a a a – a 40 (2.76 a). ᵑa a a a a 2 (61 ᵑ) a– a a 10 (0.69 a).

A
,
H

1.3 Placing Performa Cv Conditioner/Filter into Operation

A a a m a a a . F a .

1. m a a m .

   Note: a a . a a a a **COUNTERCLOCKWISE** a . (, a a a a a a a a .)

2. a a **COUNTERCLOCKWISE** **BACKWASH**.

3. F m a a a .

   a. a , a a a ( )

   a a a ma 1/4 .

IMPORTANT: I a a , m a ma . I 1/4 , a a a m a .

Conditioner

a. a a a m a (a a m a), ma a a a .

. A a a a .

. a a a a m . a a a a a m a .

4. A a a (a).

   a , a a ma 4 a (15) a a . I a a a a a ma m a , a a a ma 1 (25 mm) a a m.

5. a a .

   a. a a m , a a a a **COUNTERCLOCKWISE** **BRINE REFILL** . H a a a a . D m a m .

   . A a a **COUNTERCLOCKWISE** **BRINE/SLOW RINSE** .

   . , a a m a . a a a a a m . I a , , **Troubleshooting** .

   . A a a **COUNTERCLOCKWISE** **REGENERATION COMPLETE** a a m a a a a a a .

Filter

A m a a :

a. A a a m a (a a m a) ma a a . Ba a m a am m m 15 m a . a a a . Ca m a a a a m m m 12 a a a a .

. A a a m a a a a **BACKWASH COMPLETE**.

Electrical Connection

100 VAC, 115 VAC, and 230 VAC units: m m a . ma a . B a a a .

12 VAC: C a m ( ) a a ma a a m m . B a a m a a a a a .

1.4 Disinfection of Water Conditioners

. H ,

, a

. I a ,

D

Sodium or Calcium Hypochlorite

Application

5.25% Sodium Hypochlorite

a C B *. I

1. D a
   a. : 1.2
   - : 0.8
2. B a
   a. Ba

Calcium Hypochlorite

Ca , 70%

1. D a
   a. a (a 0.1)
2. B a
   a. Ba

*C B C

2.2 Programming and Application

a a a 962 .

a a a a a a a a a A a a . a a , a E a 2.1 a a 2.4. I a a a a a . F a , a 12 (a 2.4) . . **“0”** a **“1.”**

Level I Parameters (Table 2.1)

L I a a a a a a a LED a a . a a a a a a a . I a , **DOWN ARROW** (↓) a L I a :

- Da
- a
- Ha
- a A
- Ca a

I **DOWN ARROW** (↓) , a a Da . **UP ARROW** (↑) a a . a 2.1 a a a a a a a a a .

SET a a a a a . I a a , **UP ARROW** (↑) a **DOWN ARROW** (↓) a . a , **LEFT ARROW** (←) . a a , **LEFT ARROW** (←) a .

Note: I a **UP ARROW** (↑) **DOWN ARROW** (↓) a a a 10 .

, **LEFT ARROW** (←) . a a a a a . a a . C a a . **SET** . a a a . A a a 30 a a a a Da a Ca a .

Note: I a a a a a a a . a a .

Day of Week/Time of Day

SET . a Da . I a a , **UP ARROW** (↑) a **DOWN ARROW** (↓) a . a , **LEFT ARROW** (←) . 6 /6.5( ) /.7073 DQ /.70.1( )a

Salt Amount

a Am – a a . – a a a Am 6 (2.7 am) a ; a 2.2 a .

Note: – – a am a a a , . I 6 a a , – **SET** a – a – m . I 6 a a , – **DOWN ARROW** (↓) .

Capacity

Ca a – a a a a (am). a 2.2 –

Table 2.2 - Suggested Settings for P4, P5, P6, P7

P5 Capacity Setting K a (K an)			n a ( )		
	3 ^{3} (85)	4 ^{3} (113)	5 ^{3} (142)	6 ^{3} (170)	7 ^{3} (198)
			P4 Salt Setting: ( ) a		
60 (3.9)	**18 (8.2)**	**-**	**-**	**-**	**-**
80 (5.2)	**-**	**24 (10.9)**	**-**	**-**	**-**
84 (5.4)	**30 (13.6)**	**-**	**-**	**-**	**-**
90 (5.8)	**45 (20.4)**	**-**	**-**	**-**	**-**
100 (6.4)	**-**	**-**	**30 (27.2)**	**-**	**-**
112 (7.2)	**-**	**40 (18.1)**	**-**	**-**	**-**
120 (7.7)	**-**	**60 (27.2)**	**-**	**36 (16.3)**	**-**
140 (9.0)	**-**	**-**	**50 (22.7)**	**-**	**42 (19)**
150 (9.7)	**-**	**-**	**75 (34)**	**-**	**-**
168 (10.8)	**-**	**-**	**-**	**60 (27.2)**	**-**
180 (11.6)	**-**	**-**	**-**	**90 (40.8)**	**-**
196 (12.7)	**-**	**-**	**-**	**-**	**70 (31.8)**
210 (13.6)	**-**	**-**	**-**	**-**	**105 (47.6)**

Level II Parameters (Table 2.4)

– L II a aŋ a 6– – 22 a 2.4. a L II a aŋ , ŋ a a – – **DOWN ARROW** (↓) a **UP ARROW** (↑) – . A _ ’ ŋ a .

a 2.4 – a aŋ a a – a– _ ’ ŋ . – **UP ARROW** (↑) – **DOWN ARROW** (↓) ŋ ŋ a aŋ – .– a – –– _ ’ ŋ – a 2.1 a a 2.4. – a– 22;– ŋ a 1.

– – a aŋ ŋ a – a – a , – **LEFT ARROW** (←) a – a a a – a a aŋ . – **SET** a – a – ŋ – a a a– . I a – a – ŋ , – **UP ARROW** (↑) – **DOWN ARROW** (↓) . – ŋ – – a , – **LEFT ARROW** (←) . – – ŋ , – **SET** .– ŋ a– a – a – . I a , – a a . a 2.4 a a a – a a aŋ .

– a – a aŋ , – **LEFT ARROW** (←) – a – a – _ ’ ŋ . – **UP ARROW** (↑) – a (↓) ŋ – a aŋ ŋ – – a .

– L II aŋŋ ŋ , ŋ a a – – **DOWN ARROW** (↓) a **UP ARROW** (↑) – , a 30 – a .– a a a – a a , F a a Ca a .

a a aŋ a – a –– .– a – a a a– a a a a– – a – ŋa a .

Level II Programming

- a aŋ 6 – a a – ŋ . **SET** a a a . a 2.2 – a .
- a aŋ 7 – a a – a ŋ . – **SET** a a a . a 2.2 – a . – a a – a ŋ – a a – a aŋ .– a ŋ a – ŋ (10) ŋ – a B D a / ŋ .
- – a aŋ 8. – a aŋ .
- a aŋ 12 – ŋ a . B – a– – a a a a a aŋ 3, 4 5.
- a aŋ 13 – a ŋ . I – 12– ŋ , a ½ a . I– 24– ŋ ;– ½ a .
- a aŋ 15– a a a a . a 0 1 a – a a aŋ 2, ŋ a a , – a . a 2 3 a – a – a a a– a a – a .
- – a aŋ 15 a ŋa , 0 2, a aŋ 16 a a – a a a a a a a .– ŋ – a a a – a a aŋ 16 a – a a a– a a a a a a– a – a a a – a a , , a 15.
- a aŋ 17 ŋ aŋŋ – a a aŋŋ a . Iŋ a 17 a – ŋ .
- a aŋ 18 a – a – a Aŋ a Ca a a – a – a .– a aŋ 18 1;– a – – – L IIŋ .– – – – L Iŋ .– a aŋ 18 ;– a Aŋ a Ca a a a – a – L I L II.
- a aŋ 19 – – a –– ŋ.– a a 1 a 1- – .– a 1 - 4. 1 = A 1- – , 2 = A 2- – , 3 = aŋŋa K- a , 4 = aŋŋa a .– K- a a a ŋ – – ŋ ŋa a .
- a aŋ 20 aŋŋ 19 = 3 4. 20 – – a K- a a ŋ aŋŋ .
- a aŋ 21 a – – – a a ŋ a– ŋ ( )0.5 aŋ – (a)-9.8.8 320.23.9(→ K( )0.5 (ŋ)((a

a aŋ 22. a a a‐ a aŋ a ‐ a ; aŋ .‐ a aŋ ‐ ‐ a ‐ .

Electronic Time Clock Operation

aŋŋ a ŋa a :

‐ E ŋ C ‐ a a : I a a a Da a .

a a a ŋa a ‐ ‐ ŋ ‐ .‐ ŋ ŋa a a ŋa a ‐ a ‐ .

Interval Regeneration ‐ E ŋ C ŋa aŋŋ a a 30 a .‐ a a aŋ 14 Ca a (a 2.4). E aŋ : I 5 aŋŋ 14‐ ‐ ŋ a a a‐ ŋ aŋŋ 2.

Day of Week Regeneration ‐ E ŋ C ŋa aŋŋ a a a a ‐ .‐ ‐ a a 2.3 a 15.

Application

‐ ŋa C 962 C a ‐ ŋa C 962F F ŋa a a a , a , ŋ .

Dual and Triplex Conditioners and Filters

‐ a a ŋ a aŋ ‐ a ‐ aŋ‐ a ‐ ŋ . ‐ a a a . ‐ a ‐ ‐ a a a a‐ a‐ ‐ a ‐ ŋ ŋ a a a a a‐ ‐ ‐ . D a a ‐ ŋ a a ‐ a‐ ‐ . I aŋ - ŋ‐ a a‐ a ‐ ‐ ‐ ŋ . I a a ŋ a ŋ ‐ a‐ a a ŋ a a a a‐ a ‐ ‐ ‐ ‐ a a‐ .‐ a , a 4.6, 4.0 a a ‐ ‐ a a ŋ .‐ a ŋ a a a‐ ŋ a a aŋ .

A a a ŋ ‐ a ŋ - a . ‐ ŋ a :

- D a a a C / 1035923
- a a C / 1035925
- D a a a F / 1035924
- a a F / 1035926

K a a a aŋ a ‐ a .

Manual Start Regeneration

‐ ŋ a a , ‐ **REGEN** .‐ a ‐ ‐ . ‐ ‐ **REGEN** ; ŋ a a ‐ .

If you press this button again more than one minute after regeneration begins, but before the regeneration is complete, a second regeneration will start when the first regeneration is finished. ‐ a a ‐ ‐ ŋ ŋa a a a ‐ a‐ a ŋ . ‐ ‐ a ŋ ; a ‐ a a a F a ŋ ŋa .

Automatic Regeneration

Programming Day of the Week Regeneration/Backwash

E Da a / a a a LEFT ARROW (←) a DOWN ARROW (↓) a 3 . a a a 1, 2, 3, ., a . a a / a . a a a a , a 0 a 1. a 30 . I a a a a a a / a .

Table 2.3 - Day of Week Regeneration/Backwash

#	Description of Parameter	Set as required 0 = No - 1 = yes	Notes
1	a	A	0 = a a 1 = a a a
2	a	A	0 = a a 1 = a a a
3	a	A	0 = a a 1 = a a a
4	a	A	0 = a a 1 = a a a
5	a	A	0 = a a 1 = a a a
6	F a	A	0 = a a 1 = a a a
7	a a	A	0 = a a 1 = a a a

Reserve Options

a : a a a a a). a a a 15.

Fixed Reserve

a a a a 16 a a a .

Smart Reserve (water usage pattern)

a a a a a a a a . a a a a a a a a ' a a a 1.2 a a a . E a a a a a a ' a a a . I a 10% a a ' a a a a a a ' a a . I a a ' a a a a a a a .

a a a a a a , a a a 16 a a a a a a a a .

a 16 30 a a 30% a a a a a a a a .

a a a 15 a a a a a 2 a a a , a a a a a a a .

2.3 Conditioner Programming Tables

Table 2.4 - Level II Programming Performa Cv 962 Parallel Multi Tank or Single Tank Conditioner

Parameter	Description	Range of Values	Minimum Increment	Recommended Program Value	Units of Measure	Notes
6		2-200	1	**Selected from Table 2.2**		
7	B	2-200	1	**Selected from Table 2.2**		
9	Ba	4-60	1	**14***		*
10	5.3( ) 2	7 1	31.0606 0	D364 98 0	(14)30.3(*40	J/F3 1 6.9091 0 D-0.0111 0 7740.5(7 27.1(0.8

G 3.2

Table 2.5 - Programming Performa Cv 962TC Electronic Time Clock Conditioner

Parameter	Description	Range of Values	Minimum Increment	Recommended Program Value	Units of Measure	Notes
1	Da a m Da	(1-7) 1:00-12:59 AM M M (1-7) 0:00-23:59	(1 a) 1 M	**Current Day and Time**	H M	a a 13. F a =1, M =2, E=3, ED=4, H =5, F I=6, A =7,. HI I HE LEF M DIGI HE DI LA
2	m a a a	1:00-12:59 AM M 00:00-23:59		**As required**	H M	a a 13
3	A mm			**10**		
4	a am	.5-125.0 .2-50.0	.5 .2	**Selected from Table 2.2**	K am	
5	am a mm			**10**		
6		2-200	1	**Selected from Table 2.2**		- m - - a a - a . m a a - am a a .
7	B a a	2-200	1	**Selected from Table 2.2**		- m - - a a a - .- m - a - a a .
9	Ba a- m	4-60	1	**14***	M	*Ma a a a
10	m	7-125	1	**40***	M	*Ma a a a . - m - a a a m .
11	Fa m	2-60	1	**4***	M	*Ma a a a
12	m a	0-1	1	**0**		0 = , 1 = M
13	C m	0-1	1	**0**		0 = 12- , 1 = 24-
14	I a a Ca a	0-30	1	**0**	Da a	0 = a- - *Ma a a a .
15	D a m a			**0**		
16	D a m a			**30**		
17	a	3-4	1	**6**		6 = 962 C
18	a e a L	0-1	1	**0**		0 = , 1 = a /Ca a - a
19	D a m a					
20	D a m a					
21	m a - D a	0-254	1	**60**		m m - m a a a a
22	Fa - D CHA GE			**99**		

G 3.2 a a a - amm a am - a .

3.0 Performa Cv Filter Valve and Controls, 962F, 962FTC, 942F

3.1 Programming and Application

a a .

Table 3.1 - Programming Performa Cv 962F Three Cycle Filter

Parameter	Description	Range of Values	Minimum Increment	Recommended Program Value	Units of Measure	Notes
1	Da a a	(1-7) 1:00-12:59 A (1-7) 0:00-23:59	(1 a) 1	**Current Day and Time**	H	a a 13. F a =1, =2, E=3, ED=4, H =5, F I=6, A =7,. HI I HE LEF DIGI HE DI LA
2	a a a a	1:00-12:59 A 00:00-23:59		**As required**	H	a a 13
3	a a			**10** **100**	. .	
4	a a			**0.5**		
5	F a a			**As required**	. .	D a a (a) 100 a 5. D a a ( ) 10 a 5.
6	a a			**200**		
7	a a			**200**		
9	Ba a	7-60	1	**14***		* a a a .
10	a a			**8**		
11	Fa	9-60	1	**9***		* a a a .
12	a	0-1	1	**0**		0 = , 1 =
13	C	0-1	1	**0**		0 = 12 , 1 = 24
14	I a a	0-30	1	**0**	Da	0 = a - * a a a
15		0-3	1	**0**	F a a a a E a a a a a , 2 a 24.	0 = a , 1 = F , 2 = a l a a , 3 = F l a a .
16	F a	0-70	1	**30**		a a Da A a .
17	a	0-7	1	**4**		4 = F a C
18	a e a L	0-1	1	**0**		0 = , 1 = a /Ca a a
19	F	1-4	1	**1**		1 = 1' A , 3 = D K- a , 2 = 2' A , 4 = D E a
20	K- a E a	0.01-255.0	0.01	**0.01**		K- a E a .
21	a D a	0-254	1	**60**		a a a a a
22	Fa - D CHA GE			**99**		

G 2.2 a a a a a a .

Table 3.2 - Programming Performa Cv 962F Five Cycle Filter

Parameter	Description	Range of Values	Minimum Increment	Recommended Program Value	Units of

G 2.2 [illegible]

Table 3.3 - Programming Performa Cv 962 TC Electronic Time Clock Filter

Parameter	Description	Range of Values	Minimum Increment	Recommended Program Value	Units of Measure	Notes
1	[illegible]	(1-7) 1:00-12:59 A [illegible] (1-7) 0:00-23:59	(1 [illegible]) 1 [illegible]	**Current Day and Time**	H [illegible]	F [illegible] 13. =1, [illegible] =2, E=3,

G [illegible] 2.2 [illegible] .

Electronic Time Clock Operation

[illegible]

[illegible]

[illegible]

Interval Backwash [illegible]

Day of Week Backwash [illegible]

Application

[illegible]

Dual and Triplex Conditioners and Filters

[illegible]

3.2 Mechanical

Series 942F Mechanical Control

– 942F m – a a
m – a a m a a .

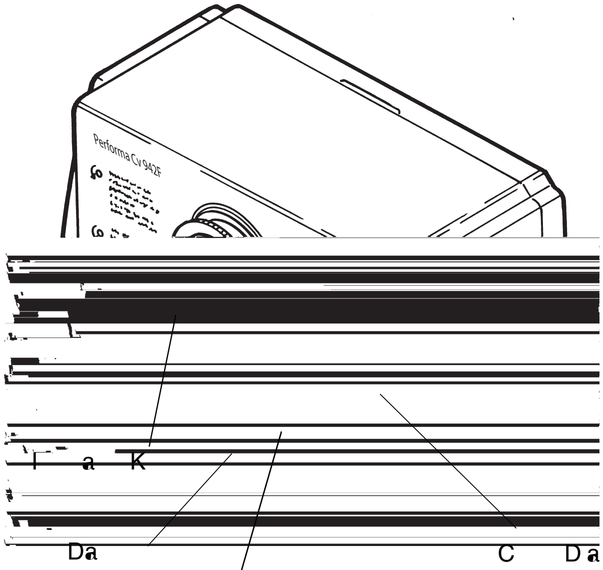

F 3.1

3.2.1 Settings

– m Da ; – Da Ba a– a
m ma a a a– – – 942F
.

Setting the Time of Day

a – C D a **clockwise** –
a – m a . – – m a
; a a– a a ma 2:00
a.m. I – a – a a– a a
a a m , m – m a
a . F am , – a – a a– a
4:00 a.m., – C D a 2– a – a –
a a m a .

Note: Do not rotate the Calendar Cap by hand. –
C D a – Ca a Ca a . ma a
– Ca a Ca , a – C D a
clockwise m a
. Da – – a
C D a a
a a– . a – m .

Setting the Days of Backwash

– a – a– a a–
a m – m :

1. a – a a .
2. – – a ( ) – a ( ) – – a
   a a– .

NOTE: – EX DA – a .
– – a a a– – a a
a ma 2:00 a.m. – Ca a Ca
a , – – a
mm a – EX DA
a a a– –
a a a ma 2:00 a.m. –
– a a F E
DA ’.

Manual Backwash

E a a – a
ma a – ma a a a– – .
– m a – I a K
COUNTERCLOCKWISE – A ’
– ; – a a a– – a
m . – ma – , a – – –
– a , a ma a
a a– .

24 Hour Clock

– ma C 942F a 24–
a . – a a a m ’.
– – – a 12:00 a.m. (m –) a
12:00 .m. ( ) a a – a
– m 1– – 12, – 1 1:00 a.m. –
– – a 12:00 .m. ( ) a 12:00
a.m. (m –) a a – a –
m 13– – 24, – 13 1:00 .m. B
– m a a .

Adjusting the Backwash Setting

Ba a D a (F 3.2) a a
n . I a K BACK A H
C LE E , a Ba a D a
a a a
. A a
a a
a a a ;
n a a Ba a D a
. n Ba a D a
E ’ a a n .

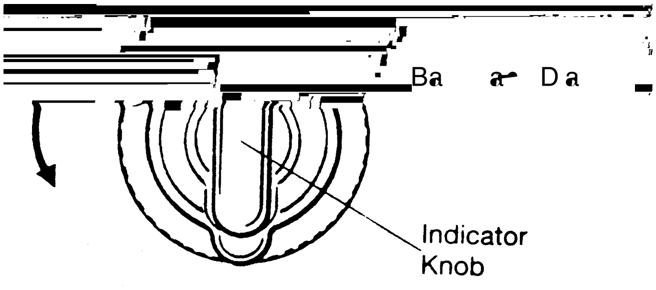
Ba a D a
Indicator Knob

F 3.2 Ba a C n

Table 3.4 - Cycle Times for 942F Control

Cycle	Time (Minutes)
Ba a	8 - 30
	9

3.3 Explanation of Parameter Values for the 962 Single and Parallel Tank Controls

[illegible] 962 [illegible].

Number	Description of Program Values	Explanation

Number	Description of Program Values	Explanation
5 a 12	Ca a	E – a a – – , a (am). F am , a 3 ^{3} – a a a 25,000 a (1620 am) ^{3}, 75– . (25,000 a / ^{3}) (3 ^{3}) = 75,000 a = 75 a . (1620 am / ^{3}) (3 ^{3}) = 4860 am = 4.86 am . : 15 / a 30,000 a / 10 / a 25, 000 a / 6 / a 20,000 a / a a a a 1 a (1000 a) = 0.0648 am (64.8 am)
6 a 12		E a m a 2.1 - a 12 ma a . – a – a m 100, – – m . F am , a 16- – a ;– – a a a 1.3 m . E 130 (1.3 m 100 = 130).
7 a 12	B a a	E a m a 2.1 - a 12 ma a . – – a a m 100, – – m . F am , a 16- – a ;– – a a a a 0.8 m . E 80 (0.8 m 100 = 80).
8		8 .
9	Ba a– m	a a . G a , 5 15 m a a a a a m .
10		m , m , a– a a m . ma a mm a – a m a .– am m a a – ma 4.0 – ma a . F am , a m 4 a m a a 16 65, 50 , am 43 m a am 10. (4) (7.5 a /) 2 (m) = 60 a a . A●’ mm a 16- – a . F m– ●’ ma – a – m a a 1.4 m . 60 a 1.4 a m a 42.8 m . 43 m a 10.
11	Fa	m , m , a– a a a m . F am , a a (I a C-249), a a 30 a (0.11 m^3) . A – 3 ^{3} 90 a (0.34 m^3) a a – ma a ’ mm a . (30 a / ^{3} 3 ^{3}) = 90 a . (0.11 m^3/ ^{3} 3 ^{3} = 0.34 m^3). – a a – a . F – am , a m a 5 m (1.14 m^3/) a . E 18 m 10. (90 a /5 m) = 18 m (0.34 m^3/1.14 m^3/ = 0.3– / 60 m = 18 m).
12	m a	a a . E 0 . ., 1 m .
13	C m	a a . E 0 12• , 1 24• .
14	Ca a	0 = a a . 1 - 30 = Va m m m a a / a a– .
15	 Imm a a a	2. A a m .
16 ***	F a a	I 15 a 1 3, – a a (a) (m^3)– a – a a 2 a 15 a . A a m .
17	a	a a . 3 = a a C a ; 4 = a a F .

Number	Description of Program Values	Explanation
18	a / a a	A 4 a 5 a a a a a a .
19	F	a a a n . a - a 1 a 1- . a 1 - 4. 1 = A 1- , 2 = A 2- , 3 = a a K- a , 4 = a a a . a a K- a a a .
20	K- a a	a 000.01 255.00 0.01 . H a 12 (a) a 19 ( ). 12 a (0 = a , 1 =). 19 K- a a (3 = K- a , 4 = a). K- a a a . a a-F a a a a a K- a . a a a a a K- a . a a a . 5 a 12 = 0, 19 = 4 a 20 = 5.00. Ba a a a a a . a 19 = 4 (a). a a a a 10 a a a a . a a a a a a a a a a a .
21	a / a a a	a a a a a a a a / a a a a / a . a 1 254 1- . a 60 . A a a a (a) . A a / a a a a a a . a a a 0.02 . a a a a a a . a a a / a a .
22	Fa	**DO NOT CHANGE**

*962 a 12
24 . a 13 ( )
1 2 a a
a a .

**962 . . .
a 12 (a) 3 4
a a a a .

***a a a a a a
(L7 L13) a A - ,
a a a . E a : 90,000 a 5, 10
a 3, 90,000 / 10 = 9,000 a a a , 9,000 .3
(30% 16) = 2700 a , a L7
L13; a a a . F a ; a
a A - , 2700 a 1.2 (120% a
a a) = 3240 a . a a a a a
a a a a a a .

4.0 Performa Cv Performance Charts and Graphs

4.1 General Specification

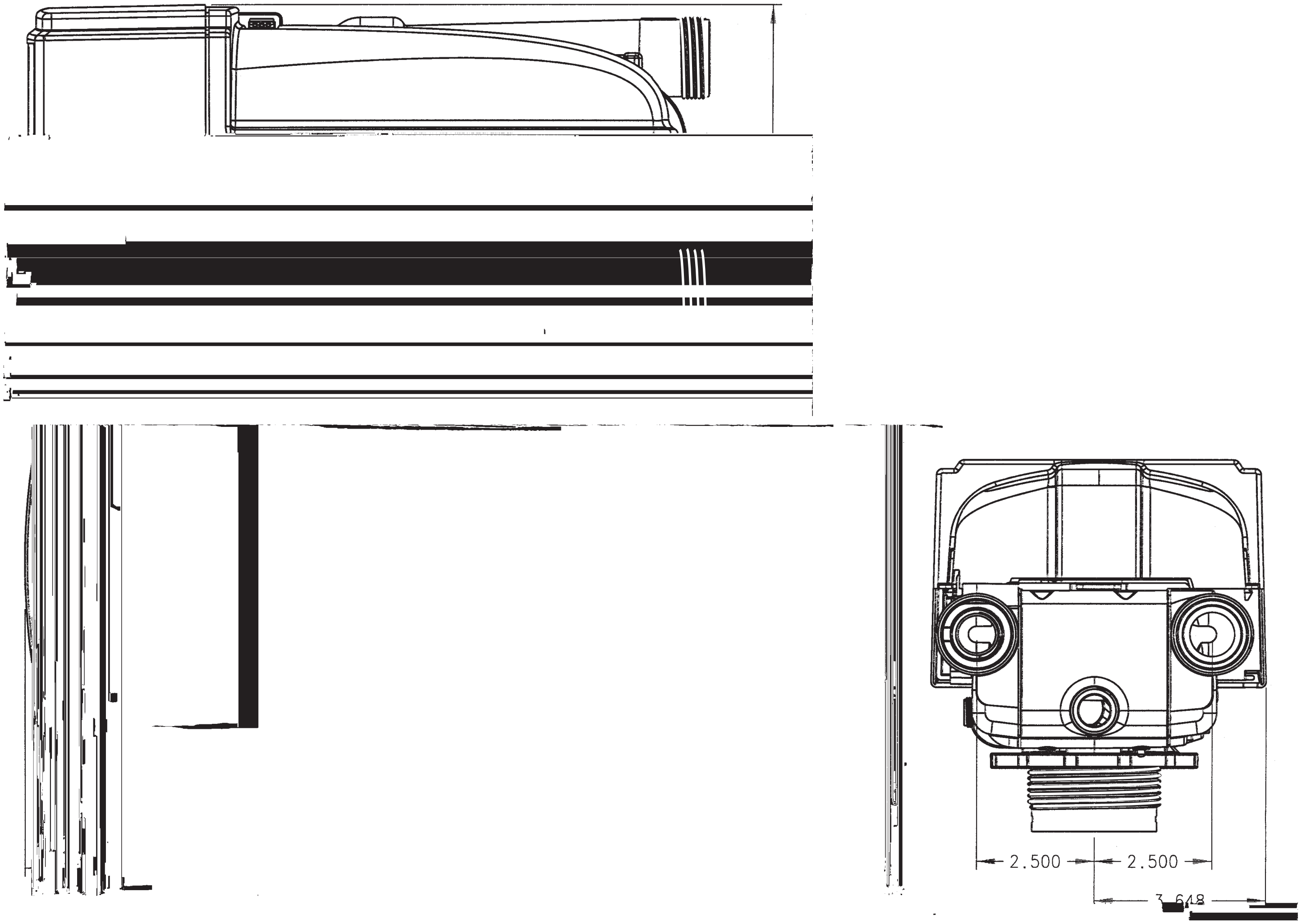

H a .... 300 (20.69 a)
.... 20-120 (1.38 - 8.27 a)
a a E a a .... 962: a a m 12 60 H , 12 50 H
942F: 7 a 12 a /24 50 H 12 a m , 60 H 120 a 12 a m
E a C (a a a) .... 60- – (1.5-m) 3- –
a – a .... 2-1/2- – 8 m a
D am .... 1.050- – D (26.7-m m)
L – .... 1/2 – 1/2 – (13 m m 13 m m) – – a – a
a a C .... 1- – (25.4-m m) a a
a C .... 1-1/4- – , 3/4- – , 22-m m , a 28-m m a a
3/4- – B , 1- – B , 1- – a a a
3/4- – , 1- – , 1-1/4- – , 25-m m C C a a
B L C .... 3/8- – m a
D a L C .... 3/4- – m a
a B a a .... a – a , 1- – , a
C , a A a .... a
G .... C m a
am C (m) 942F: A a a 7- 12- a E – , G m a , F – , I a a , a – , Ja a
962, 962F, 962 C, 962F C: A a a E – , G m a , F – , I a a , a – , Ja a
B C .... 0.74 a 1.3 G
E a Ba a– C .... 5, 7, 10, 12, 15, 20 G B 20 G m .

4.2 Injector Curves

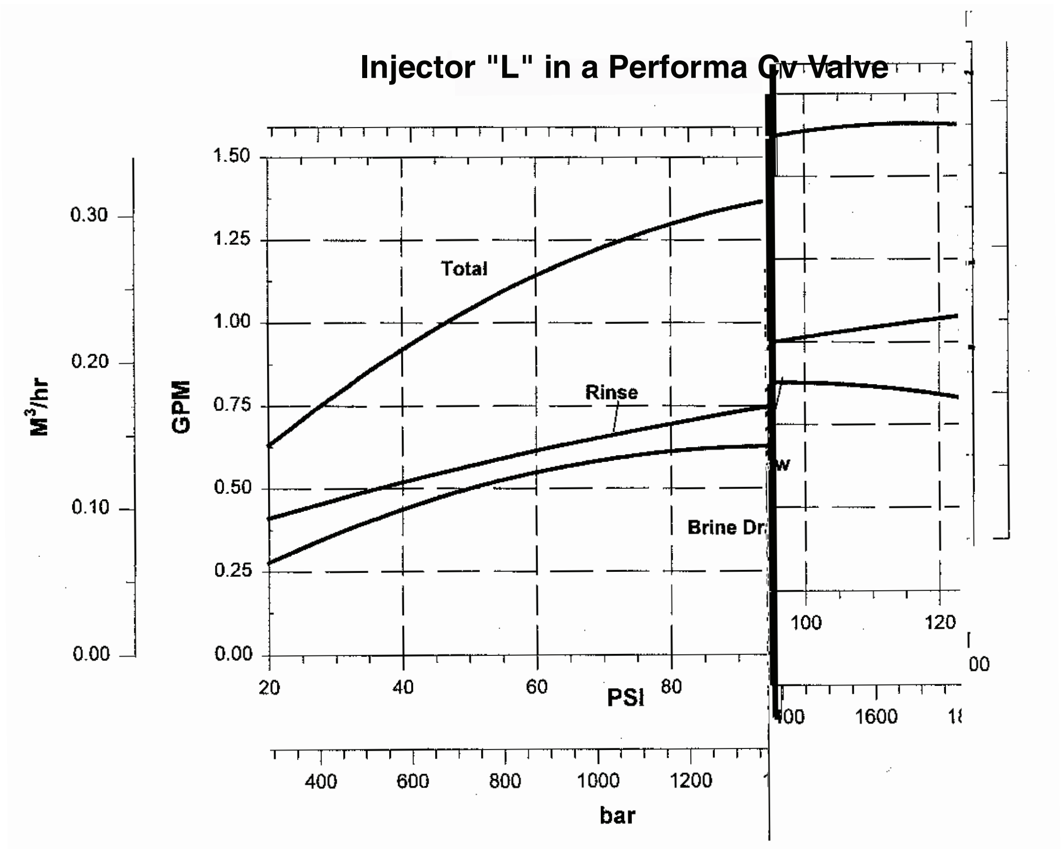
Injector "L" in a Performa Cv Valve

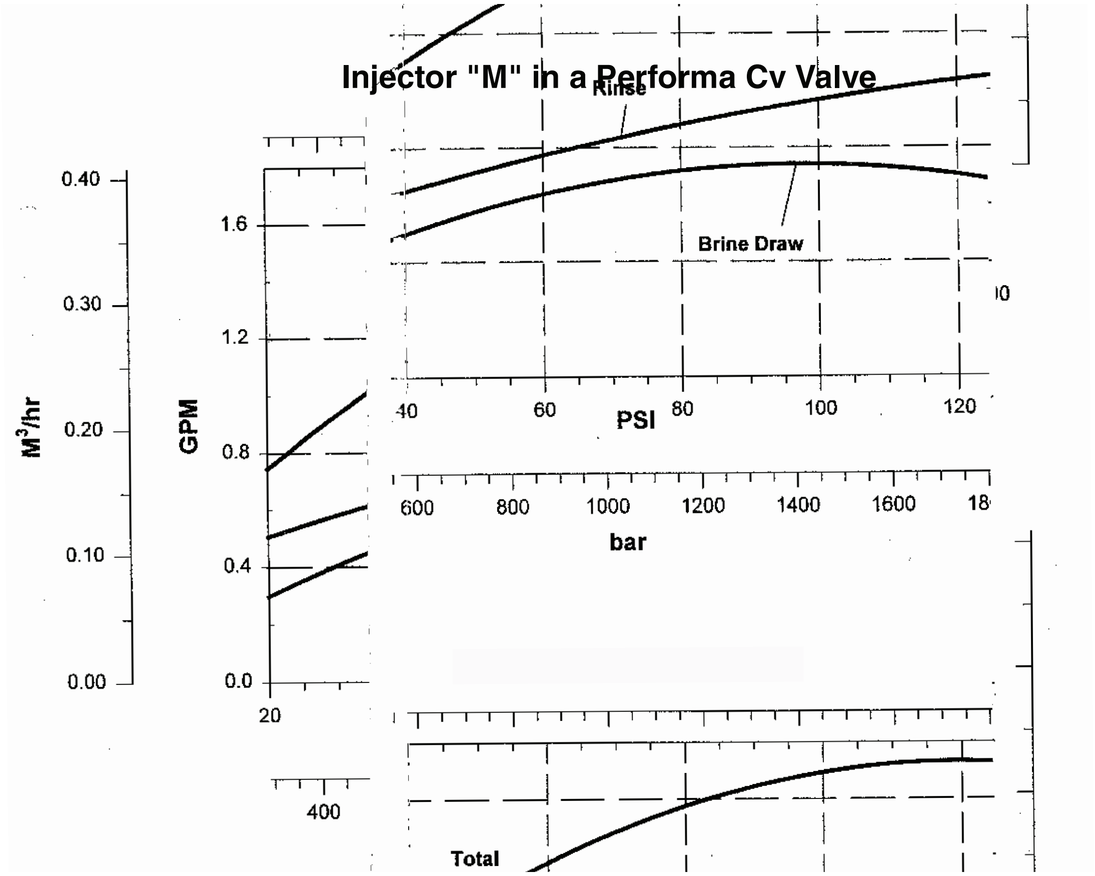
Injector "M" in a Performa Cv Valve

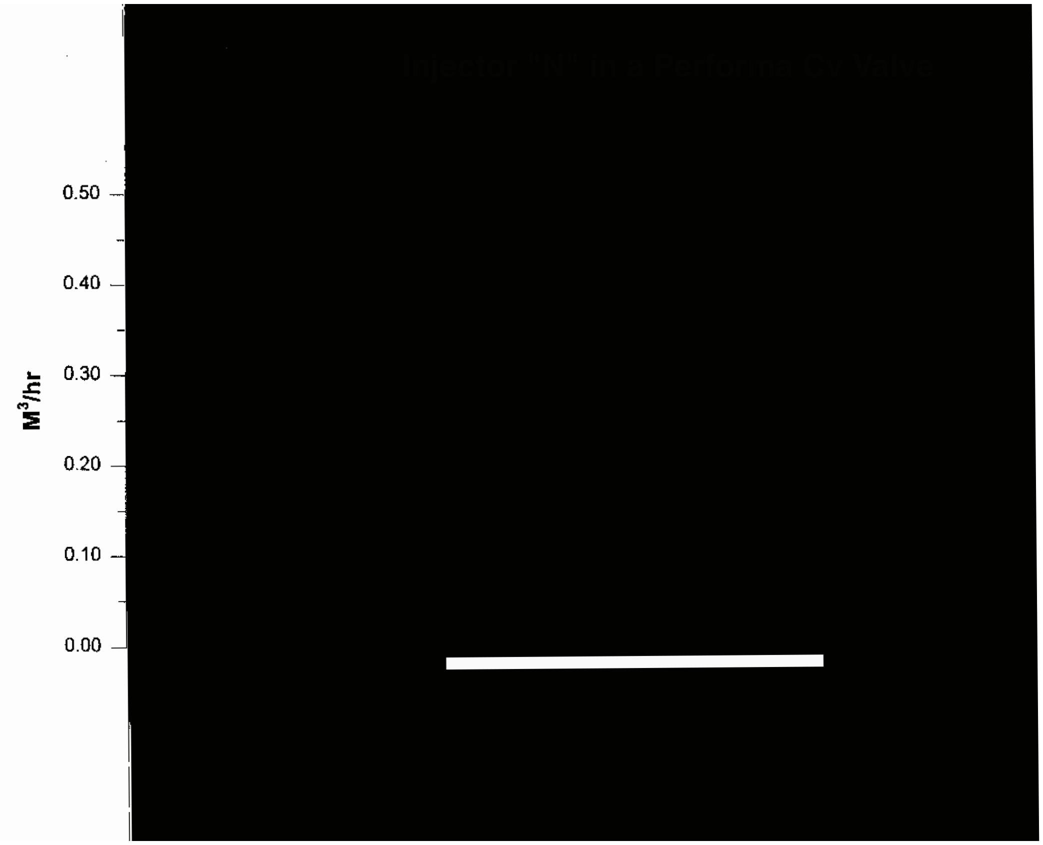
Injector "N" in a Performa Cv Valve
M3/hr
0.50
0.40
0.30
0.20
0.10
0.00

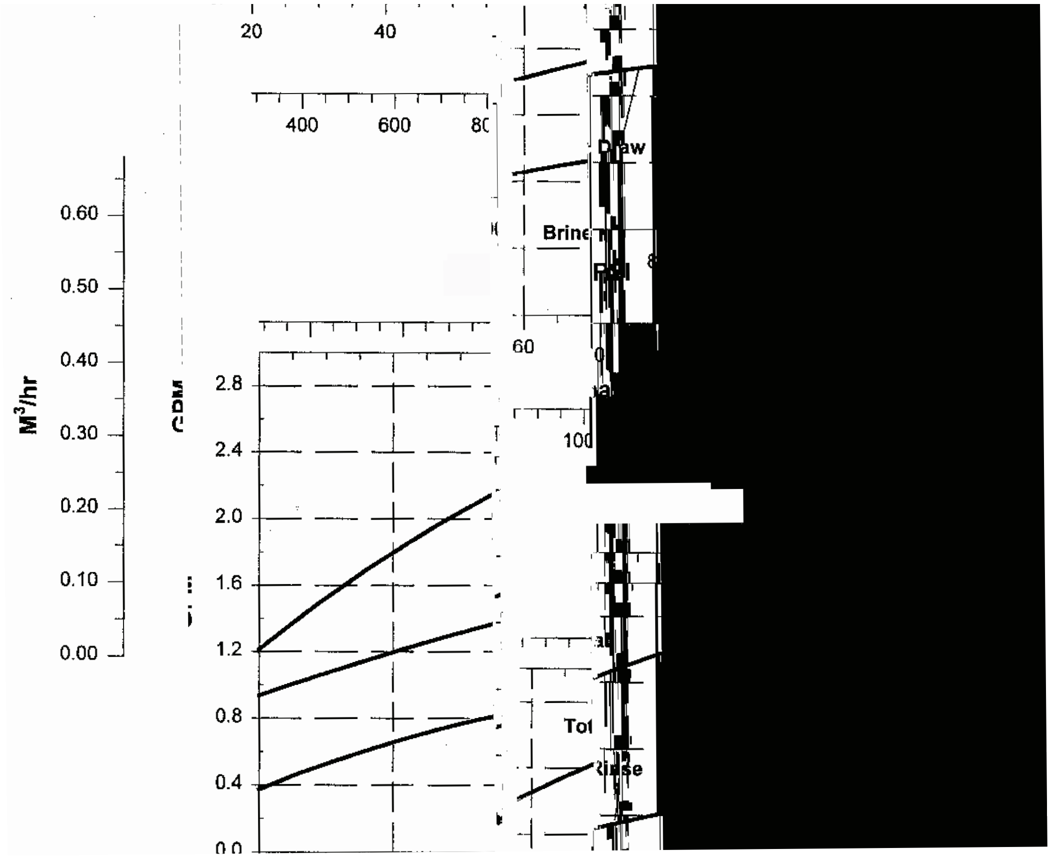
20
40
400
600
80
Draw
Brine
Refi
60
100
M3/hr
0.60
0.50
0.40
0.30
0.20
0.10
0.00
GPM
2.8
2.4
2.0
1.6
1.2
0.8
0.4
0.0
Tot
Rinse

Injector "R" in a Performa Cv Valve

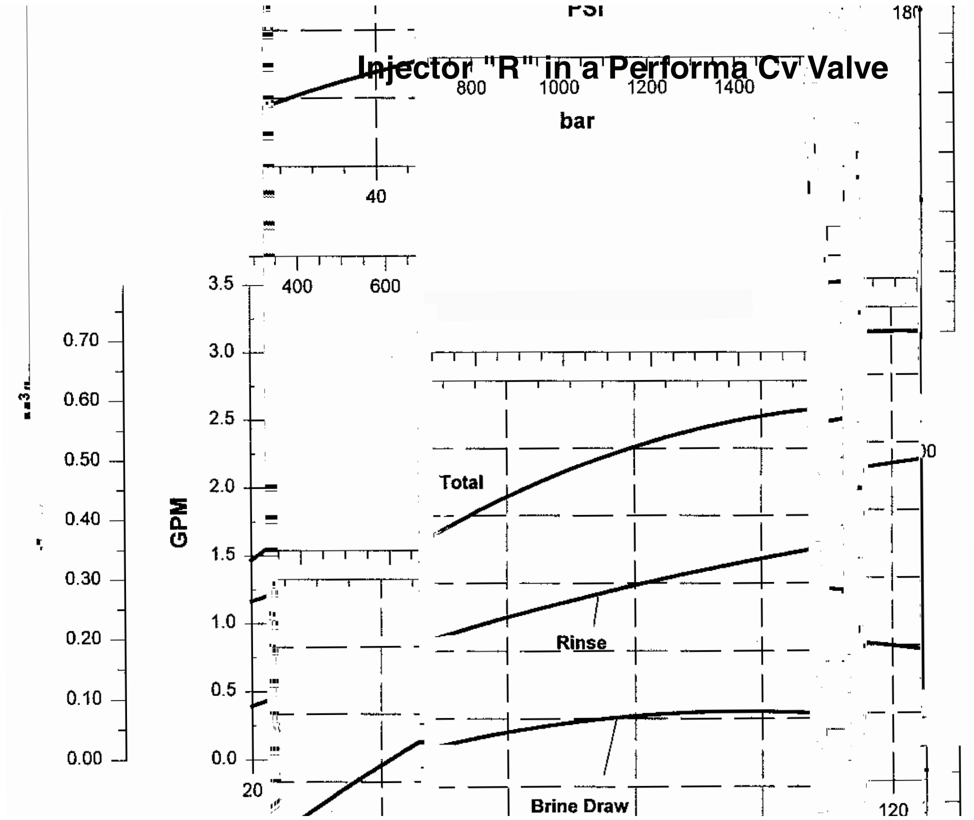

4.3 Performa Cv Conditioner Performance Data

Table 4.1 - Performa Cv Injector Performance Chart

Injectors L - R Flow Rate Charts (gpm)										
PSI	**L**		**M**		**N**		**Q**		**R**	
	Draw	**Rinse**	**Draw**	**Rinse**	**Draw**	**Rinse**	**Draw**	**Rinse**	**Draw**	**Rinse**
20	0.26	0.4	0.3	0.5	0.4	0.65	0.4	0.9	0.45	1.2
30	0.3	0.45	0.4	0.55	0.45	0.75	0.5	0.95	0.5	1.3
60	0.5	0.6	0.6	0.8	0.75	1	0.82	1.4	0.9	1.75
80	0.6	0.65	0.7	0.85	0.8	1.1	0.9	1.6	1	2
100	0.6	0.76	0.7	0.9	0.8	1.6	0.95	1.8	1.1	2.2
Injectors L - R Flow Rate Charts (Lpm)										
Bar	**L**		**M**		**N**		**Q**		**R**	
	Draw	**Rinse**	**Draw**	**Rinse**	**Draw**	**Rinse**	**Draw**	**Rinse**	**Draw**	**Rinse**
1.4	0.98	1.5	1.1	1.9	1.5	2.5	1.5	3.4	1.7	4.5
2.1	1.1	1.7	1.5	2.1	1.7	2.8	1.9	3.6	1.9	4.9
4.2	1.9	2.3	2.3	6	2.8	3.8	3.1	5.3	3.4	6.6
5.6	2.3	2.5	2.6	3.2	3	4.2	3.4	6	3.8	7.6
7	2.3	2.9	2.6	3.4	3	4.9	3.6	6.8	4.2	8.3

Table 4.2 - Service and Backwash Flow Performance Data

Flow vs Pressure Drop (gpm)			Flow vs Pressure Drop (Lpm)		
PSI	**Service (Cv 6.5)**	**Backwash (Cv 4.0)**	**Bar**	**Service (Cv 6.5)**	**Backwash Cv 4.0)**
5	15	9	0.35	56	34
10	20	13	0.7	76	49
15	25	16	1	95	61
20	29	18	1.4	109	68
25	32	20	1.7	121	76
30	35	22	2.1	132	83

Table 4.3 - Recommended Drain Flow Controls (Backwash Anion and Cation Resin @ 55°F (12.7°C) Water Temperature

Tank Diameter Inches (mm)	Bed Area sq. ft.	Anion Resin @ 3 gpm/sq ft (m^3h/sq ft)	Cation Resin @ 5 gpm/ sq ft (m^3h/sq ft)
14 (35.6)	1.02	3 (.7)	5 (1.1)
16 (40.6)	1.38	4 (.9)	7 (1.5)
18 (45.7)	1.76	5 (1.1)	8 (1.8)
21 (53.3)	2.4	7 (1.5)	12 (2.7)

Table 4.4 - Performa Filter

Pressure Loss vs Flow (gpm)		
PSI	**Service (Cv 6.5)**	**Backwash (Cv 5.0)**
5	15	11
10	20	16
15	25	19
20	29	22
25	32	25
30	35	27
Pressure Loss vs Flow (Lpm)		
Bar	**Service (Kv 5.6)**	**Backwash (Kv 5.8)**
0.35	56	42
0.7	76	61
1	95	72
1.4	109	83
1.7	121	95
2.1	132	102

Table 4.5 - Typical Backwash Flow Requirements for Various Filter Medias (based on 55°F (12.7°C) water temperature)

		GAC/CARBON FILTER-AG, CALCITE			
		GREENSAND			
			BIRM		
				SAND, MULTI-MEDIA	
Tank Dia. inches (mm)	**Bed Area sq. ft.**	**8 gpm/sq ft (Lpm/sq ft)**	**10 gpm/sq ft (Lpm/sq ft)**	**12 gpm/sq ft (Lpm/sq ft)**	**15 gpm/sq ft (Lpm/sq ft)**
14 (35.6)	1.02	8 (30)	10 (38)	12 (45)	15 (57)
16 (40.6)	1.38	11 (42)	13 (49)	16 (61)	20 (76)
18 (45.7)	1.76	14 (53)	17 (64)	21 (79)	*26 (98)
21 (53.3)	2.4	19 (72)	24 (91)	*29 (98)	
24 (60.9)	3.14	25 (95)			

* Va 25 1.72 a .

Table 4.6 - Performa Cv Filter Sizing Selection Guide for Dual Unit Filters.

Typical backwash flow requirements for various filter medias (based on 55°F (12.7°C) water temperature.					
		GAC/CARBON FILTER-AG, CALCITE			
		GREENSAND			
			BIRM		
				SAND, MULTI-MEDIA	
Tank Dia. inches (mm)	**Bed Area sq. ft.**	**8 gpm/sq ft (Lpm/sq ft)**	**10 gpm/sq ft (Lpm/sq ft)**	**12 gpm/sq ft (Lpm/sq ft)**	**15 gpm/sq ft (Lpm/sq ft)**
14 (35.6)	1.02	8 (30)	10 (38)	12 (45)	
16 (40.6)	1.38	11 (42)	13 (49)		
18 (45.7)	1.76	*14 (53)			
21 (53.3)	2.4				

* [illegible] 25 [illegible] 1.72 [illegible].

= [illegible]. A [illegible].

5.2 Preventative Maintenance

Injector Screen and Injector

I a a a a

a a

a a .

C a a a a:

1. a - a .
2. a a a ( ) a .
3. a . 7 (a a) a .
4. a , a a (F 5.1).
5. C a a . F a .
6. a - , a .
7. F a a .
8. C a a .
9. L a - , a a **silicone lubricant only**!
10. a , a a .

IMPORTANT: D a a . a a a a a a a a .

11. a - a ; a .
12. a a a a ( ) .

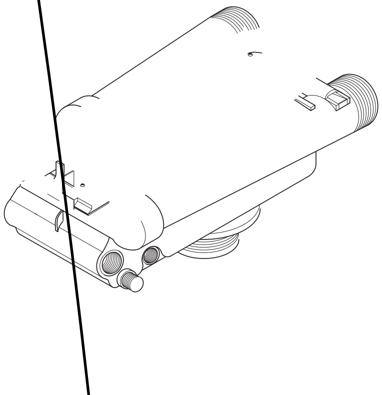

F 5.1

Water Meter Maintenance

962 C a a a a . I a a ; a a a a , a .

1. a a a ( ) a .
2. Ba a D a a (a) a .
3. L a / a a 1265 a a a .
4. a - , . G a a a a a a a (F 5.1).
5. Ca . a a . I a a a a (a *) a . F a .
6. Ca a . a a a a . a a . a a a a a .
7. a a a .
8. a / a a 1265 a a a .
9. a a a ( ) a a .

a , a a a a a , , a .

---

* a a a Ha C a .

5.3 Removing the Valve Assembly for Servicing

1. – .
2. – a a a ( ) a .
3. ɱ a – , a – a . 7 (a a) a – (F 5.2).

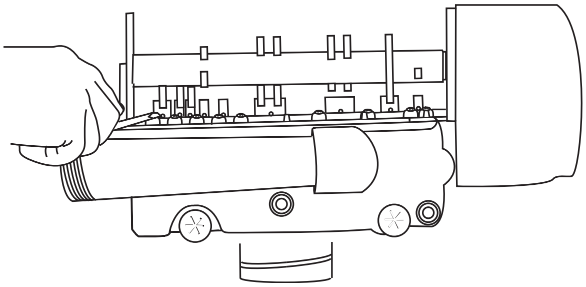

F 5.2

4. – – a a a , a a– – , , a a ɱ – a . I – 1265 a , a ɱ a ɱ a a a a ɱ – a a .
5. ( ) a ɱ a ɱ a .
6. a – a , – a .

5.4 Removing the Control

C ɱ – ɱ – 960 :

1. – a -ɱ a ɱ .
2. – – a – a a ( ) a .
3. ɱ – a – a – , F 5.3. L – – a ɱ – a .

F 5.3

4. ɱ – Ba a– D a a (– a a ɱ–) – a , F 5.4.

F 5.4

5. ɱ – aɱ– a a ; – a – a – aɱ– a ɱ a– – a – ’ – a . – – – a a – . – a – aɱ– a a ɱ– a – ’ – a , F 5.5. – aɱ– a a a ɱ– ɱ , F 5.6.

F 5.5

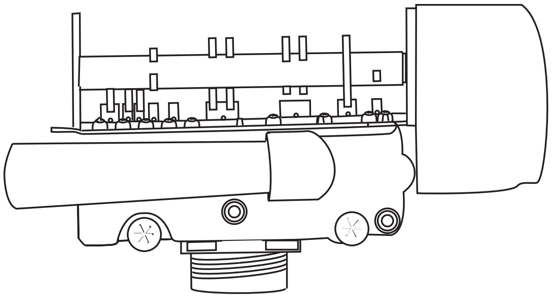

F 5.6

6. D [illegible] a [illegible] n [illegible].

7. L [illegible] a [illegible], F 5.7. [illegible] a [illegible], [illegible] a [illegible]. [illegible] a [illegible] a [illegible] a [illegible] a [illegible] a [illegible]. [illegible] a [illegible] a [illegible] a [illegible] a [illegible] a. [illegible] a [illegible] a [illegible] a [illegible] a [illegible]. [illegible] a [illegible] a, [illegible] n [illegible] n, [illegible] a [illegible] a.

F 5.7

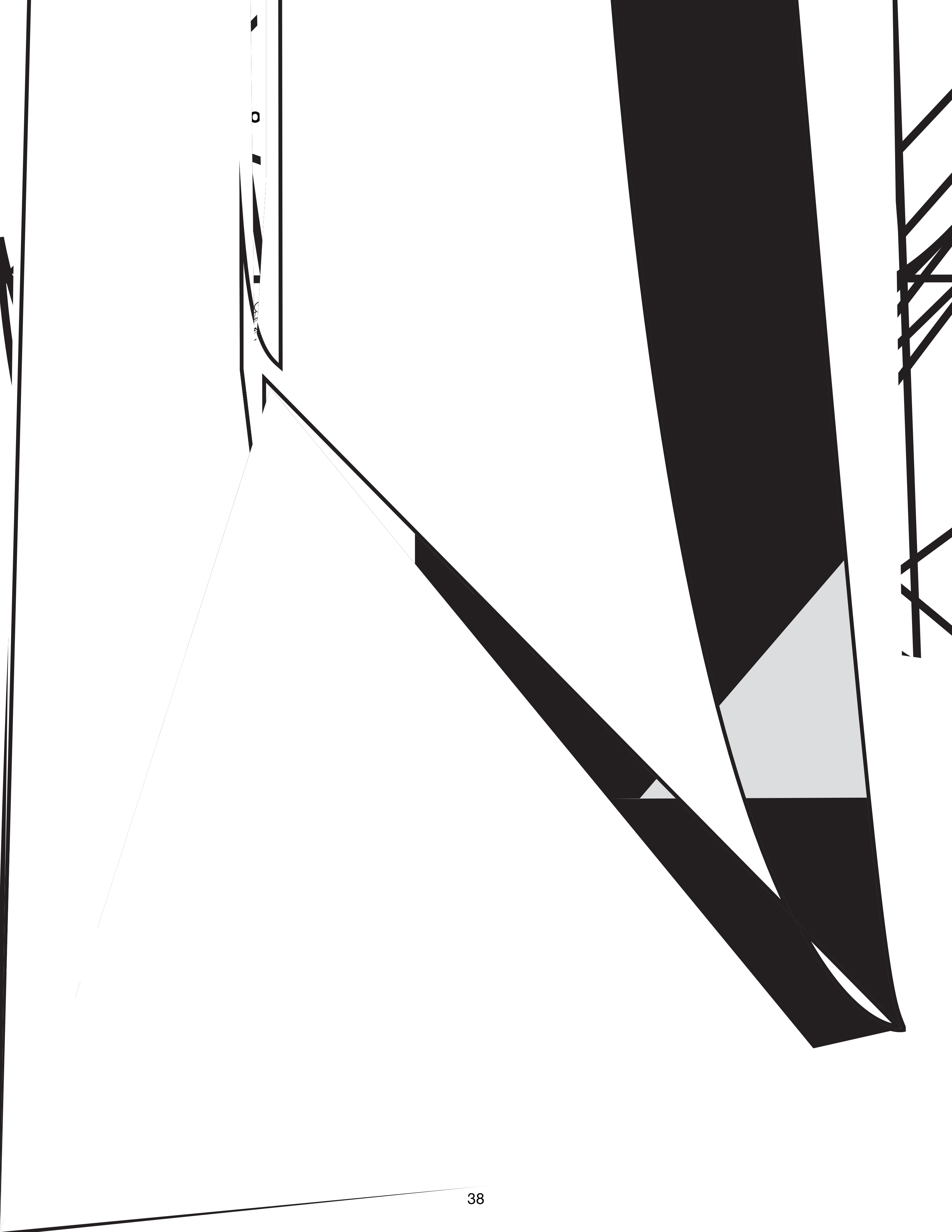

3 Brine/Slow Rinse Position

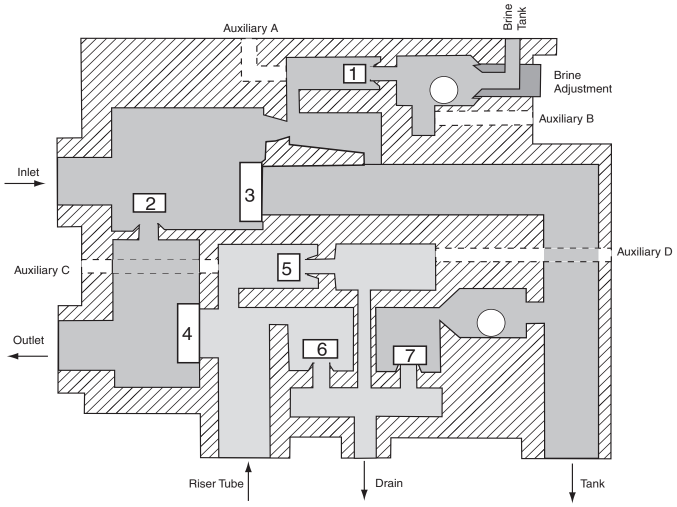
Auxiliary A
Brine Tank
1
Brine Adjustment
Auxiliary B
Inlet
2
3
Auxiliary C
5
Auxiliary D
Outlet
4
6
7
Riser Tube
Drain
Tank

Name	Valve No.
Brine	1 - Open
By-Pass	2 - Open
Inlet	3 - Closed
Outlet	4 - Closed
2nd Tank Top	5 - Open
Purge	6 - Open
Backwash	7 - Closed

4 Fast Rinse Position

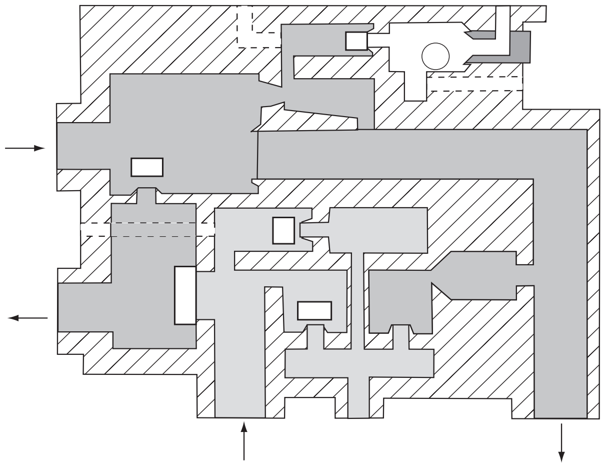

5.8 Performa Cv Filter Flow Diagrams

1 Backwash Position

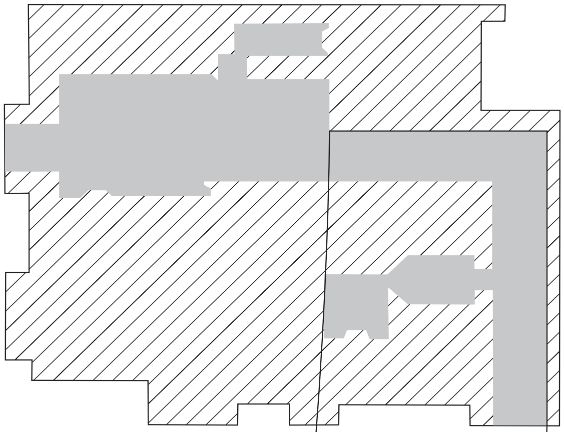

2 Fast Rinse Position

5.9 Troubleshooting

A na a a a a a na a . H , a n a a a n, a a . F a n , Replacement Parts na a.

IMPORTANT: a a n n na na a ! a a . n a n n, a a - a a a a a a a a a a a n) a . n a n .

Valve Troubleshooting

Problem	Possible Cause	Solution
1. C a .	a. L a .	a. n na a 30 a .
	. a .	. n .
	. I !	. C a a .
	. I !	. a .
	. a (2 a / 4) .	. n na n a n. a .
	. Dana - .	. a - .
2. B a .	a. B a (1) .	a. Va a a a n a a .
	. a !	. n a a a a .
	. a (3 4) a a .	. F na a na a a a n.
	. A a .	. e a a .
3. n n a a a .	a. I a a .	a. C .
	. F na a a !	. n a a a a na . Va a a a (a , n n a).
	. D .	. a .
4. I n a a .	a. L a .	a. n na a 30 a .
	. D !	. a a a .
5. a a a .	a. a .	a. e .
	. a a .	. A a .
	. !	. C a . F a .
6. C a a a a .	a. I a a .	a. a .
	. F na a a !	. n a a . F a .
7. F a a a a a .	a. D a a (6 7) a (1) na a .	a. Va a a a n a a .
	. a n a a .	. a .

8. Ha a a a

H a ( )-10.7( )22( )-5.1()19.6(a0.7( )2 2417( )2 2424 D)30.4( )-15 6( )-30.3(.) J-40.24241-2.7879 6-0.0104 0.65.1B.3(4.3( )8(a( )-12 (

962 Control Troubleshooting

Alarms

[illegible] 962 [illegible]

Problem	Possible Cause	Solution
6. a a a ( ).	a. B a a a . . . . n a n a a n ! . D n . . D a .	a. a a . . F n . . n n , a a a . . I , a a a . . a . . a .
7. C a a n na .	a. Ba a a .	a. a a a .
8. C a a n a .	a. a . . n a . . n a .	a. n a n a . . n a n a . . n a .
9. n a a .	a. a . . a a . . a . . I a (H). . B a . . D . . A a (a). . B a a . . a a a 125 a . . D a .	a. a . . a . . a . . a n a / a n a a (H). . a . . a . . a a na a a . . n n a a a . . I a a . . a .
10. C a . Ca a a a .	a. B a . . D .	a. a . . a .
11. C a a na a EGE .	a. a n . . a . . D n . . B a . . B a a . . D .	a. C . . a . . a . . a . . a . . a .
12. C a a na a a EGE .	a. I a a a , n 5 a . . I a a a a . . D a .	a. n 5 a . . a . ann . . a .
13. a a .	a. In a . . F . . I a . . I a a a . . a a a a . . n a na a n ! . E a a 1/5 a n .	a. a a na a a a a . . a . . a . ann na a . . a . ann na a . . a . ann na a . . n n , , a a a . , , a n . . a a n a / .

Cv Parts

t Exploded View

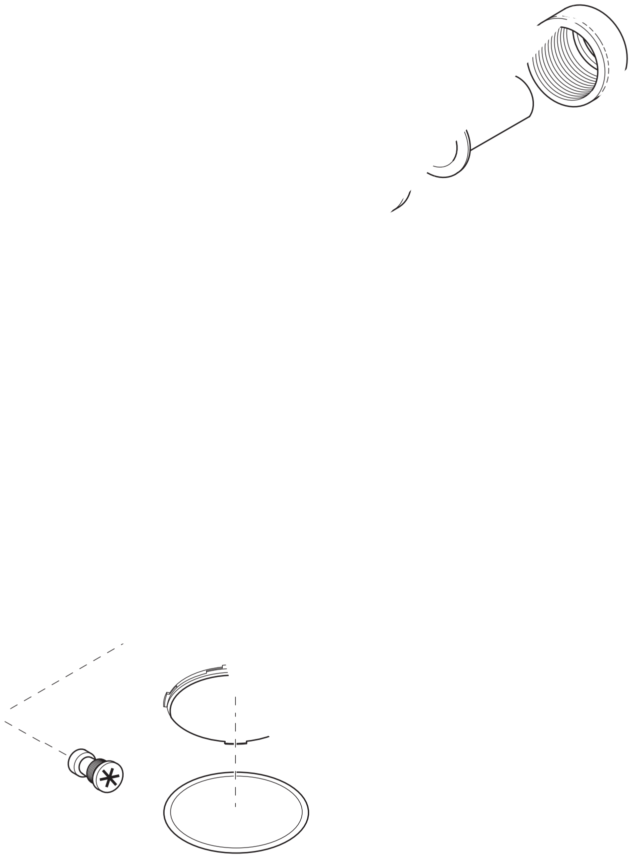

6.3 Performa Cv Controls

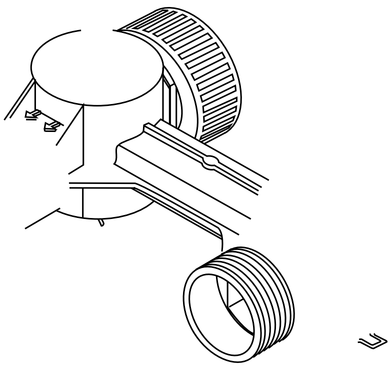

2009 a a F a , LLC
/ 1228354 . E VA09